770 P

4WD Motor Grader

JOHN DEERE

MADE TO GRADE AND LEAD THE WAY

Over the past six decades, John Deere motor graders have built a reputation for outstanding machine control and effortless grading precision. The innovative ideas of our customers have lead to a legacy of industry firsts. Performance boosters enabled with standard electrohydraulic (EH) controls like exclusive automation features. The choice between dual-joystick or fingertip controls. Grade-control solutions including fully integrated SmartGrade. And a tall mainframe that smoothly shoulders large loads and clears obstacles. Its optimized machine specs, reliable capability, and updated cab amenities that put operator comfort front and center can help take your productivity to the next level.

FEATURES

Taking it in tandem
Crab steering on the four-wheel-drive 770 P-Tier positions the tandems on firm ground, reduces side drift, and increases side-slope stability. Clear visibility to the tandems enables unobstructed work around utilities and other obstacles.

Power that checks and balances
Balanced engine horsepower, torque, and blade pull produce generous force and lugging ability, to deliver more power to the ground, easily pull through tough spots, or tackle steep hills. John Deere motor graders are designed with optimal weight distribution over each axle, for outstanding stability and grading performance.

Work your way
Armrest-mounted EH controls help minimize effort and fatigue. Opt for state-of-the-art dual-joystick or fingertip controls that mimic the conventional control pattern. A field kit allows you to easily swap between the two. A steering wheel is also included.

All about the operator
Modern cab features next-generation eight-inch touchscreen display, Automatic Temperature Control system, and centralized machine-function switches, all close at hand. Ergonomic heated/ventilated seat with adjustable armrests is designed for all-day comfort. Enhanced right-hand console tilts for convenient access and storage.

Unlimited grade control
Industry-first John Deere SmartGrade Motor Graders are fully integrated and calibrated from the factory, arriving at your jobsite ready to work. In-cylinder position sensing allows the machine to stay on grade no matter what blade pitch, articulation angle, or circle offset you're running, without the limitations imposed by masted systems.

Now you see it
High-resolution rearview camera with dedicated in-cab monitor comes standard. Optional dual front alley camera with two in-cab displays presents an overview of the street ahead, improving operator awareness.

Beyond beacons
Optional new low-profile roof beacons enhance jobsite visibility. Optional add-on seat-belt-minder beacon is also available.

Count on cross slope
Standard cross slope maintains slopes by automatically adjusting one side of the blade while the operator controls the other. Cross slope can also be operated in "manual mode" as a slope meter. Automated cross slope simplifies holding a consistent slope by reducing operation to a single lever. Both dual-joystick controls and fingertip armrest controls come equipped with cross slope and can be easily upgraded to 3D SmartGrade.

Durable details
High-edge paint and powder-coated latches on service doors step up durability and help protect the machine exterior from wear and damage.

Uptime is everything
All daily service points, including fuel and diesel exhaust fluid (DEF), are grouped on the left side of the machine for convenient ground-level access. On the right, periodic-service points including the engine oil, hydraulic, transmission, differential. and fuel filter bank are within easy reach. Cooling package minus stacked coolers plus hinged swing-out fan simplifies core cleanout. Variable-speed hydraulically driven fan† runs only as fast or as often as needed, for conservation of power and fuel plus quiet operation.

†Standard for EPA Final Tier 4/EU Stage V; optional for EPA Tier 3/EU Stage IIIA.

Positioned for precision
Encoded sensors within the hydraulic cylinders help position them for maximum precision and force, boosting efficiency. The sensors also deliver diagnostics to catch potential system issues.

Premium circle productivity
Featuring a fully sealed bearing and pinion that run smooth and quiet, the industry-leading design of the optional premium circle reduces operating costs while delivering 40-percent more torque and 15-percent more speed than a traditional circle. The premium circle eliminates having to compensate for wear in the circle and improves accuracy when using a grade-control system — especially with John Deere SmartGrade. And greasing intervals of only four zerks every 500 hours make the premium circle easy to maintain. Durable dual-input and proven single-input circles are also available.

Bad-weather warrior
Available as a factory option, the John Deere Path mapping solution enhances efficiency and precision in snow-removal applications. Paired with SF-RTK for repeatable accuracy within one inch, operators get a better sense of road edges and boundaries in winter weather conditions.

Connected machines
John Deere construction equipment comes with in-base connectivity — free from subscriptions or annual renewals. Analyze critical machine data, track utilization, review diagnostic alerts, and more from **the John Deere Operations Center™.** The Operations Center also enables John Deere Connected Support™, which uses data from thousands of connected machines to proactively identify issues and help keep you running. With your approval, your dealer can also remotely monitor machine health, diagnose problems, and even update machine software without a trip to the jobsite.*

*Availability varies by region and product. Options not available in every country.

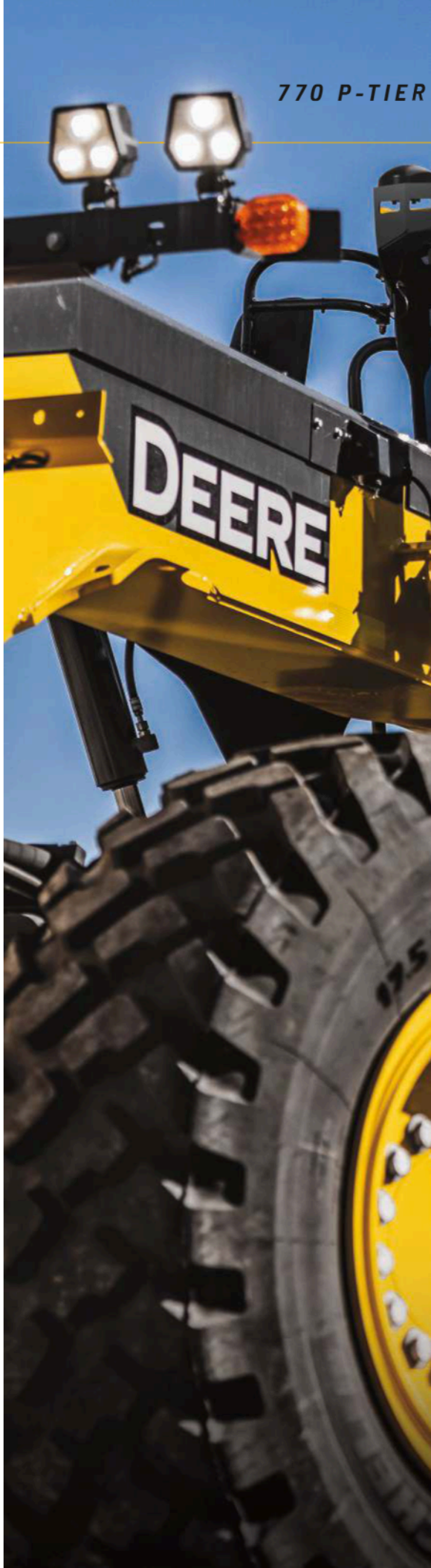

PUT INTELLIGENCE TO WORK

With automation features including in-base Auto-Articulation, Blade Flip, and Machine Presets, it's push-button easy to set yourself apart from your competition:

- **Auto-Articulation** lets the operator increase the maneuverability of coordinated steering and articulation while using only the joystick-steering function to steer and operate other necessary functions without manually articulating the machine.
- Use **Blade Flip** to automatically mirror the circle to a preset angle.
- Easily prepare the machine for transport with **Machine Presets.** Stow the blade and ripper, turn on the lights including the hazards, and enable Auto-Shift with one push-button press.

Add these optional automation features to further enhance machine operation:

- **Auto-Shift PLUS** allows operators to move the machine and work without having to use the inching pedal.
- **Auto-Gain for Cross Slope** automatically adjusts gain settings based on ground speed to maximize performance.
- **Machine-Damage Avoidance*** reduces the risk of blade damage to machine structures during any operation.
- **Auto-Pass*** makes grading easy by automatically placing the blade on the ground and activating the grade-control system (when equipped) at the start of the pass, then automatically raising and resetting the blade at the end of it.

*Free 500-hour demo of Machine-Damage Avoidance and Auto-Pass options not available in all countries; see your local John Deere dealer for details.

770 P-TIER MOTOR GRADER SPECIFICATIONS

Engine	770 P-TIER	
Manufacturer and Model	John Deere PowerTech™ PSS 9.0L	John Deere PowerTech™ Plus 9.0L
Non-Road Emission Standard	EPA Final Tier 4/EU Stage V	EPA Tier 3/EU Stage IIIA
Cylinders	6	6
Displacement	9.0L (548 cu. in.)	9.0L (548 cu. in.)
Net Engine Power		
Gear 1	149 kW (200 hp)	149 kW (200 hp)
Gear 2	157 kW (210 hp)	157 kW (210 hp)
Gear 3	168 kW (225 hp)	168 kW (225 hp)
Gear 4	172 kW (230 hp)	172 kW (230 hp)
Gear 5	179 kW (240 hp)	179 kW (240 hp)
Gear 6	183 kW (245 hp)	183 kW (245 hp)
Gear 7	187 kW (250 hp)	187 kW (250 hp)
Gear 8	190 kW (255 hp)	190 kW (255 hp)
Net Peak Torque	1314 Nm (969 lb.-ft.)	1300 Nm (959 lb.-ft.)
Net Torque Rise	54%	57%
Aspiration	Series turbocharged, charge-air cooled	Turbocharged, charge-air cooled
Lubrication	Full-flow spin-on filter and integral cooler	Full-flow spin-on filter and integral cooler
Air Cleaner With Restriction Indicator	Dual element, dry	Dual element, dry
Cooling		
Engine Coolant, Extended Life, Rating	–37 deg. C (–34 deg. F)	
Powertrain		
Transmission	Direct-drive John Deere PowerShift Plus™, modulated shift-on-the-go, Event-Based Shifting (EBS), inching pedal; independent transmission reservoir with separate filtration and cooling system	
Gears		
Forward	8	
Reverse	8	

Maximum Travel Speeds	*No tire slip at 2,180 rpm, 14.0-R24 tires*	**Maximum Travel Speeds** ***(continued)***	*No tire slip at 2,180 rpm, 14.0-R24 tires*
Gear 1	4.0 km/h (2.5 mph)	Gear 5	16.4 km/h (10.2 mph)
Gear 2	5.6 km/h (3.5 mph)	Gear 6	23.2 km/h (14.4 mph)
Gear 3	7.7 km/h (4.8 mph)	Gear 7	32.3 km/h (20.1 mph)
Gear 4	10.9 km/h (6.8 mph)	Gear 8	45.5 km/h (28.3 mph)

Front Axle	Heavy-duty welded fabrication
Oscillation (total)	32 deg.
Wheel Lean Angle (each direction)	20 deg.
Differentials	Spiral bevel; hydraulically actuated, clutch type can be applied on-the-go; selectable manual or automatic differential lock
Steering (all models include steering wheel)	All-hydraulic power-frame articulation for maneuverability and productivity; crab steering reduces side drift, positions tandems on firm ground, and increases side-slope stability; return-to-straight control included on electrohydraulic (EH)
Turning Radius (front steer and articulation)	7.21 m (284 in.) (23 ft. 8 in.)
Articulation (both right and left)	22 deg.

Images and descriptions are for general information only. Some illustrations may depict product options or accessories NOT AVAILABLE in all regions or may require modifications to meet local regulations. Images of equipment models may be digitally or AI generated, are for illustration purposes only, and may not reflect actual products, features, options, or attachments. Equipment availability may be limited. Net engine power is with standard equipment including air cleaner, exhaust system, alternator, and cooling fan at test conditions specified per ISO 9249. No derating is required up to 3050-m (10,000 ft.) altitude. Specifications and designs are subject to change without notice and, where applicable, are in accordance with SAE standards. Unless otherwise noted, specifications are based on a unit with standard equipment; 14.0 x 610-mm (24 in.) 12 PR G2, Bias tires; and 3.66-m x 610-mm x 22-mm (12 ft. x 24 in. x 7/8 in.) high-strength, wear-resistant moldboard with 152-mm x 16-mm (6 in. x 5/8 in.) Dura-Max® through-hardened-steel cutting edges. Weights include lubricants, coolants, full fuel tank, and 79-kg (175 lb.) operator. For complete details, contact your John Deere dealer.

Powertrain ***(continued)***	**770 P-TIER**	
Final Drives	Inboard-mounted planetary sealed in cooled, filtered oil	
Brakes	Foot-controlled, hydraulically operated, multiple wet-disc brakes sealed in pressurized, cooled, filtered oil; both independent systems effective on all 4 tandem wheels	
Primary and Secondary Brakes	Hydraulically actuated, inboard of tandem pivot, self-adjusting, sealed in cooled and filtered oil, multi-disc (ISO 3450)	
Parking Brake	Automatically spring applied, hydraulically released, oil cooled, self-adjusting (ISO 3450)	
Hydraulics		
Type	Closed-center, pressure-compensated load-sensing (PCLS), variable-displacement piston pump	
Maximum Pump Flow	212 L/min. (56 gpm)	
Maximum System Pressure	18 961 kPa (2,750 psi)	
Pump Displacement	90 cm^3 (5.5 cu. in.)	
Blade Function		
All-hydraulic, industry-standard lever placement of blade-function controls; includes float position; 7 discrete saddle positions		
Blade Range		
Lift Above Ground	490 mm (19.3 in.)	
Blade Side Shift (right or left)	683 mm (26.9 in.)	
Pitch at Ground Line		
Forward	42 deg.	
Back	5 deg.	
Shoulder Reach Outside Wheels (frame straight, right or left)	2083 mm (82.0 in.) (6 ft. 10 in.)	
Bank Cut Angle (right or left)	90 deg.	
Blade Pull		
At Maximum Operating Weight	15 501 kg (34,173 lb.)	
Electrical		
Solid-state load center and sealed-switch module	*EPA Final Tier 4/EU Stage V*	*EPA Tier 3/EU Stage IIIA*
Voltage	24 volt	24 volt
Number of Batteries	2	2
Battery Capacity	1,400 CCA	1,400 CCA
Reserve Capacity	440 min.	440 min.
Amp-Hour Rating	224 amp-hour	224 amp-hour
Base Alternator Rating	300 amp	130 amp
Lights	Driving lights; 2 high- and 2 low-beam halogen headlights; front and rear LED turn signals and marker lights; LED brake and hazard warning lights	
Mainframe		
Type	Welded box construction	
Width (minimum)	307 mm (12.1 in.)	
Height (minimum)	307 mm (12.1 in.)	
Thickness		
Side	16 mm (0.63 in.)	
Top and Bottom Plate	23 mm (0.89 in.)	

Images and descriptions are for general information only. Some illustrations may depict product options or accessories NOT AVAILABLE in all regions or may require modifications to meet local regulations. Images of equipment models may be digitally or AI generated, are for illustration purposes only, and may not reflect actual products, features, options, or attachments. Equipment availability may be limited. Net engine power is with standard equipment including air cleaner, exhaust system, alternator, and cooling fan at test conditions specified per ISO 9249. No derating is required up to 3050-m (10,000 ft.) altitude. Specifications and designs are subject to change without notice and, where applicable, are in accordance with SAE standards. Unless otherwise noted, specifications are based on a unit with standard equipment; 14.0 x 610-mm (24 in.) 12 PR G2, Bias tires; and 3.66-m x 610-mm x 22-mm (12 ft. x 24 in. x 7/8 in.) high-strength, wear-resistant moldboard with 152-mm x 16-mm (6 in. x 5/8 in.) Dura-Max® through-hardened-steel cutting edges. Weights include lubricants, coolants, full fuel tank, and 79-kg (175 lb.) operator. For complete details, contact your John Deere dealer.

770 P-TIER

Draft Frame (drawbar)	770 P-TIER	
Welded box construction machined for flatness with double ball-and-socket pivot connection		
Circle		
Welded construction, heat-treated, machined for flatness		
	Standard Circle	*Premium Circle*
Circle Diameter	1524 mm (60 in.)	1524 mm (60 in.)
Rotation	360 deg.	360 deg.
Surface	Quick-change bronze or nylon wear inserts	Sealed and lubricated roller element slewing bearing
Pinion/Ring-Gear Connection	Adjustable backlash and open for serviceability	No adjustment; fully sealed and lubricated
Drive	Hydraulic motor and worm gear with positive lock	Hydraulic motor and worm gear with positive lock
Slip Clutch	Option	Standard
Circle Side Shift		
Right	787 mm (31 in.)	787 mm (31 in.)
Left	787 mm (31 in.)	787 mm (31 in.)
Moldboard		
High-strength, pre-stressed for higher strength, wear-resistant, high-carbon steel and reversible end bits; blade side-shift wear system includes quick-change replaceable wear inserts and quick-adjust jackscrew system		
Base Length	3.66 m (144 in.) (12 ft. 0 in.)	
Height (measured along arc, including cutting edge)	610 mm (24 in.)	
Thickness	22 mm (0.88 in.)	
Cutting Edge		
Dura-Max™ through-hardened steel edge		
Thickness	16 mm (0.62 in.)	
Width	152 mm (6 in.)	
Scarifiers		
	Front	*Mid-mount*
Type	V-type toolbar with 2-pitch positions and hydraulic float	Radial linkage, with NeverGrease™ pin joints; V-type manual 3-pitch positions and hydraulic float
Width of Cut	1.20 m (48.0 in.) (4 ft. 0 in.)	1.19 m (46.7 in.) (3 ft. 11 in.)
Number of Shanks/Teeth	5 (maximum capacity 9)	11
Lift Above Ground	589 mm (23.2 in.)	335 mm (13.2 in.)
Maximum Depth	335 mm (13.2 in.)	325 mm (12.8 in.)
Shank		
Spacing	146 mm (5.75 in.)	117 mm (4.6 in.)
Size	25 x 76 mm (1 x 3 in.)	25 x 76 mm (1 x 3 in.)
Front Lift Group (Balderson-style)		
Parallel linkage, mechanical pins, and hydraulic float		
Lift		
Above Ground (top of tube)	1864 mm (73.4 in.)	
Range	988 mm (38.9 in.)	
Front Dozer Blade		
Parallel linkage and hydraulic float		
Lift Above Ground	706 mm (27.8 in.)	

Images and descriptions are for general information only. Some illustrations may depict product options or accessories NOT AVAILABLE in all regions or may require modifications to meet local regulations. Images of equipment models may be digitally or AI generated, are for illustration purposes only, and may not reflect actual products, features, options, or attachments. Equipment availability may be limited. Net engine power is with standard equipment including air cleaner, exhaust system, alternator, and cooling fan at test conditions specified per ISO 9249. No derating is required up to 3050-m (10,000 ft.) altitude. Specifications and designs are subject to change without notice and, where applicable, are in accordance with SAE standards. Unless otherwise noted, specifications are based on a unit with standard equipment; 14.0 x 610-mm (24 in.) 12 PR G2, Bias tires; and 3.66-m x 610-mm x 22-mm (12 ft. x 24 in. x 7/8 in.) high-strength, wear-resistant moldboard with 152-mm x 16-mm (6 in. x 5/8 in.) Dura-Max™ through-hardened-steel cutting edges. Weights include lubricants, coolants, full fuel tank, and 79-kg (175 lb.) operator. For complete details, contact your John Deere dealer.

Rear Ripper/Scarifier	770 P-TIER	
Parallel linkage, with NeverGrease pin joints, hydraulic float, and integrated hitch		
	Ripper	*Scarifier*
Width of Cut	2.21 m (87.2 in.) (7 ft. 3 in.)	2.18 m (86.0 in.) (7 ft. 2 in.)
Number of Shanks/Teeth	3 (maximum capacity 5)	None standard (maximum capacity 9)
Lift Above Ground	602 mm (23.7 in.)	810 mm (31.9 in.)
Maximum Depth	426 mm (16.8 in.)	323 mm (12.7 in.)
Force		
Penetration	9616 kg (21,200 lb.)	—
Pry-Out	12 730 kg (28,066 lb.)	—
Shank Size	61.5 x 133 mm (2.42 x 5.25 in.)	25 x 76 mm (1 x 3 in.)

Operator Station
Low-profile cab with ROPS (ISO 3471-2008) and FOPS (ISO 3449-2005)

Tires/Wheels			
	14R24 on 254-mm (10 in.) Rim	*17.5R25 on 356-mm (14 in.) Rim*	*550/65R25 on 432-mm (17 in.) Rim*
Wheel Tread on Ground	2.08 m (82.0 in.)	2.16 m (85.0 in.)	2.21 m (87.0 in.)
Ground Clearance (front axle)	587 mm (23.1 in.)	587 mm (23.1 in.)	612 mm (24.1 in.)

Serviceability		
Refill Capacities	*EPA Final Tier 4/EU Stage V*	*EPA Tier 3/EU Stage IIIA*
Fuel Tank	397.0 L (105 gal.)	416.5 L (110 gal.)
Diesel Exhaust Fluid (DEF) Tank	22.5 L (6 gal.)	—
Cooling System	55.0 L (14.5 gal.)	48.5 L (12.8 gal.)
Engine Oil With Filter	28.4 L (7.5 gal.)	28.0 L (7.4 gal.)
Transmission Fluid	28.4 L (7.5 gal.)	28.4 L (7.5 gal.)
Differential Housing	38.0 L (10 gal.)	38.0 L (10 gal.)
Tandem Housings (each)	74.0 L (19.5 gal.)	74.0 L (19.5 gal.)
Circle Gearbox	5.7 L (1.5 gal.)	5.7 L (1.5 gal.)
Hydraulic Reservoir	60.5 L (16 gal.)	53.0 L (14 gal.)

Operating Weights		
With Full Fuel Tank, 3.66-m x 610-mm x 22-mm (12 ft. x 24 in. x 7/8 in.) Moldboard With 152-mm x 16-mm (6 in. x 5/8 in.) Cutting Edges, 14R24 L2 Tires, and 79-kg (175 lb.) Operator	*EPA Final Tier 4/EU Stage V*	*EPA Tier 3/EU Stage IIIA*
Front	4327 kg (9,539 lb.)	4337 kg (9,561 lb.)
Rear	12 086 kg (26,645 lb.)	11 490 kg (25,331 lb.)
Total	16 413 kg (36,184 lb.)	15 827 kg (34,892 lb.)
Typical Operating Weight With Front Push Block, Rear Ripper/Scarifier, and Other Equipment		
Front	5822 kg (12,836 lb.)	5852 kg (12,902 lb.)
Rear	14 115 kg (31,118 lb.)	13 376 kg (29,488 lb.)
Total	19 937 kg (43,954 lb.)	19 228 kg (42,390 lb.)
Maximum Operating Weight	24 948 kg (55,000 lb.)	24 948 kg (55,000 lb.)

Images and descriptions are for general information only. Some illustrations may depict product options or accessories NOT AVAILABLE in all regions or may require modifications to meet local regulations. Images of equipment models may be digitally or AI generated, are for illustration purposes only, and may not reflect actual products, features, options, or attachments. Equipment availability may be limited. Net engine power is with standard equipment including air cleaner, exhaust system, alternator, and cooling fan at test conditions specified per ISO 9249. No derating is required up to 3050-m (10,000 ft.) altitude. Specifications and designs are subject to change without notice and, where applicable, are in accordance with SAE standards. Unless otherwise noted, specifications are based on a unit with standard equipment; 14.0 x 610-mm (24 in.) 12 PR G2, Bias tires; and 3.66-m x 610-mm x 22-mm (12 ft. x 24 in. x 7/8 in.) high-strength, wear-resistant moldboard with 152-mm x 16-mm (6 in. x 5/8 in.) Dura-Max® through-hardened-steel cutting edges. Weights include lubricants, coolants, full fuel tank, and 79-kg (175 lb.) operator. For complete details, contact your John Deere dealer.

770 P-TIER

Option Weights	770 P-TIER
Moldboards With Through-Hardened Dura-Max Cutting Edge	
3.66 m x 610 mm x 22 mm (12 ft. x 24 in. x 7/8 in.) With 152-mm x 16-mm (6 in. x 5/8 in.) Cutting Edge and 19-mm (3/4 in.) Hardware	0 kg (0 lb.)
4.27 m x 610 mm x 22 mm (14 ft. x 24 in. x 7/8 in.) With 152-mm x 16-mm (6 in. x 5/8 in.) Cutting Edge and 19-mm (3/4 in.) Hardware	105 kg (231 lb.)
4.27 m x 610 mm x 22 mm (14 ft. x 24 in. x 7/8 in.) With 203-mm x 19-mm (8 in. x 3/4 in.) Cutting Edge and 19-mm (3/4 in.) Hardware	159 kg (350 lb.)
4.27 m x 686 mm x 25 mm (14 ft. x 27 in. x 1 in.) With 203-mm x 19-mm (8 in. x 3/4 in.) Cutting Edge and 19-mm (3/4 in.) Hardware	252 kg (556 lb.)
Extensions, 610 mm (2 ft.) (right or left)	
For Use With 610-mm (24 in.) Moldboards	116 kg (255 lb.)
For Use With 686-mm (27 in.) Moldboards	120 kg (265 lb.)
Overlay End Bits, Reversible (one pair)	
For 152-mm (6 in.) Cutting Edge	19.5 kg (43 lb.)
For 203-mm (8 in.) Cutting Edge	23 kg (51 lb.)
Heavy-Duty Dual-Input Circle-Drive Gearbox	14 kg (31 lb.)
Circle-Drive Slip Clutch	9 kg (20 lb.)
Circle	
Standard	0 kg (0 lb.)
Premium	289 kg (638 lb.)
Moldboard Impact-Absorption System	43 kg (95 lb.)
Ripper/Scarifier, Rear Mounted With Hitch and Ripper Shanks (3)	1139 kg (2,510 lb.)
Scarifier Shanks With Teeth (9 for rear ripper/scarifier)	68 kg (150 lb.)
Ripper Shanks and Teeth (2)	63 kg (139 lb.)
Rear Counterweight With Integral Rear Hitch	727 kg (1,603 lb.)
Rear Hitch	54.4 kg (120 lb.)
Push Block, Front	1338 kg (2,950 lb.)
Scarifier	
Front Mount With Teeth (5)	831 kg (1,833 lb.)
Mid-Mount With Teeth (11)	1481 kg (3,265 lb.)
Front Lift Group (Balderson-style)	763 kg (1,682 lb.)

Option Weights *(continued)*	770 P-TIER
Front Dozer Blade	1039 kg (2,290 lb.)
Tires	
14.00-24, 12 PR G2	–220.4 kg (–486 lb.)
17.5-25, 12 PR G2/L2	–106 kg (–234 lb.)
14.00-R24, Radial, G2/L2 General Purpose	0 kg (0 lb.)
14.00-R24, Radial, G2/L2 Snow	40.8 kg (90 lb.)
17.5-R25, Radial, L2 General Purpose	51.7 kg (114 lb.)
17.5-R25, Radial, G2/L2 Snow	95.3 kg (210 lb.)
17.5-R25, Radial, G3/L3 General Purpose	141.5 kg (312 lb.)
550/65R25 XLD70 G3/L3 Radial, General Purpose	495.3 kg (1,092 lb.)
1-Piece Rims	
229 mm x 610 mm (9 in. x 24 in.)	0 kg (0 lb.)
330 mm x 635 mm (13 in. x 25 in.)	65.3 kg (144 lb.)
Multi-Piece Rims	
254 mm x 610 mm (10 in. x 24 in.)	179.6 kg (396 lb.)
356 mm x 635 mm (14 in. x 25 in.)	266.7 kg (588 lb.)
432 mm x 635 mm (17 in. x 25 in.)	321.1 kg (708 lb.)
Fenders	
Front	99 kg (218 lb.)
Rear	158 kg (348 lb.)
Opening Front and Side Windows	14.5 kg (32 lb.)
Premium Air-Suspension, Heated Seat With Adjustable Arm- and Headrests	13 kg (28 lb.)
Coolant Heater	4 kg (9 lb.)
Quick Service	11 kg (24 lb.)
Secondary Steering	26 kg (58 lb.)
Fire Extinguisher	14.5 kg (32 lb.)
Lighting Packages	
10 Halogen Lights	4.5 kg (10 lb.)
18 Halogen Lights	8 kg (18 lb.)
16 LED Premium With Front and Rear Extensions (EU/SV)	28 kg (62 lb.)
18 LED Lights	7 kg (16 lb.)
High-Front Light Bar for Snowplowing	20 kg (44 lb.)
Auxiliary Hydraulic Control Valve Section and Controls	7 kg (15 lb.)
Hydraulics for Front-Mounted Equipment	9 kg (19 lb.)

Images and descriptions are for general information only. Some illustrations may depict product options or accessories NOT AVAILABLE in all regions or may require modifications to meet local regulations. Images of equipment models may be digitally or AI generated, are for illustration purposes only, and may not reflect actual products, features, options, or attachments. Equipment availability may be limited. Net engine power is with standard equipment including air cleaner, exhaust system, alternator, and cooling fan at test conditions specified per ISO 9249. No derating is required up to 3050-m (10,000 ft.) altitude. Specifications and designs are subject to change without notice and, where applicable, are in accordance with SAE standards. Unless otherwise noted, specifications are based on a unit with standard equipment; 14.0 x 610-mm (24 in.) 12 PR G2, Bias tires; and 3.66-m x 610-mm x 22-mm (12 ft. x 24 in. x 7/8 in.) high-strength, wear-resistant moldboard with 152-mm x 16-mm (6 in. x 5/8 in.) Dura-Max® through-hardened-steel cutting edges. Weights include lubricants, coolants, full fuel tank, and 79-kg (175 lb.) operator. For complete details, contact your John Deere dealer.

Machine Dimensions	770 P-TIER
A Height to Top of Cab	3.18 m (10 ft. 5 in.)
B Height to Top of Exhaust	3.10 m (10 ft. 2 in.)
C Height to Top of Blade-Lift Cylinders	3.05 m (10 ft. 0 in.)
D Tandem Axle Spacing	1.54 m (5 ft. 1 in.)
E Blade Base	2.57 m (8 ft. 5 in.)
F Wheelbase	6.16 m (20 ft. 3 in.)
G Overall Length	8.89 m (29 ft. 2 in.)
H Overall Length With Scarifier	9.69 m (31 ft. 9 in.)

Machine Dimensions *(continued)*	770 P-TIER
I Overall Length With Push Block and Ripper	9.99 m (32 ft. 9 in.)
I' Overall Length With Scarifier and Ripper	10.59 m (34 ft. 9 in.)
Overall Length With Front-Mounted Blade and Ripper	10.60 m (34 ft. 9 in.)
J Overall Width With 14.00-R24 Tires*	2.49 m (8 ft. 2 in.)
J' Overall Width With 17.5-R25 Tires*	2.64 m (8 ft. 8 in.)
J'' Overall Width 550/65R25 Tires*	2.82 m (9 ft. 3 in.)

**Also see Tires/Wheels on page 9.*

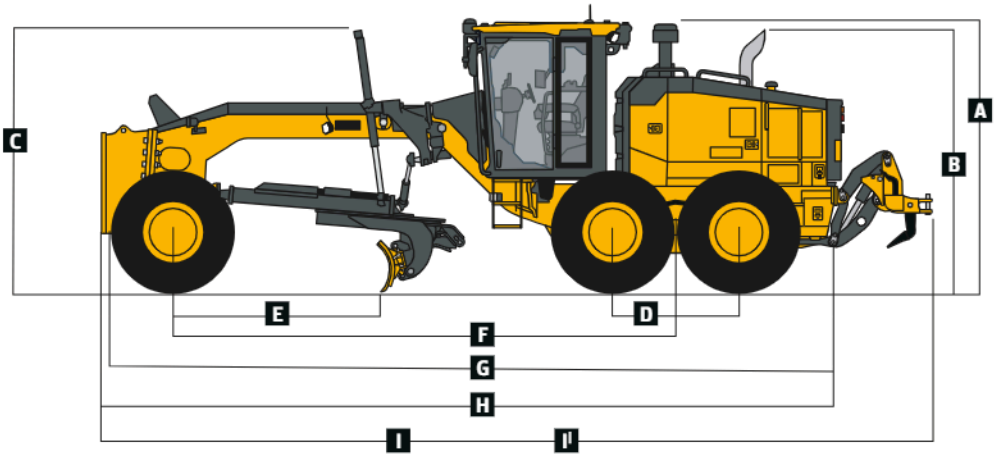

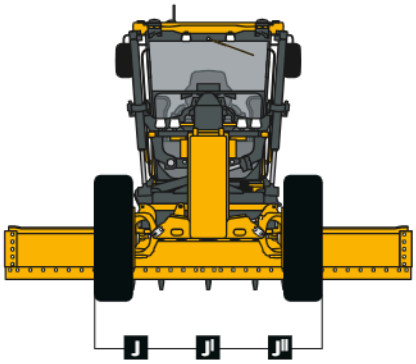

Images and descriptions are for general information only. Some illustrations may depict product options or accessories NOT AVAILABLE in all regions or may require modifications to meet local regulations. Images of equipment models may be digitally or AI generated, are for illustration purposes only, and may not reflect actual products, features, options, or attachments. Equipment availability may be limited. Net engine power is with standard equipment including air cleaner, exhaust system, alternator, and cooling fan at test conditions specified per ISO 9249. No derating is required up to 3050-m (10,000 ft.) altitude. Specifications and designs are subject to change without notice and, where applicable, are in accordance with SAE standards. Unless otherwise noted, specifications are based on a unit with standard equipment; 14.0 x 610-mm (24 in.) 12 PR G2, Bias tires; and 3.66-m x 610-mm x 22-mm (12 ft. x 24 in. x 7/8 in.) high-strength, wear-resistant moldboard with 152-mm x 16-mm (6 in. x 5/8 in.) Dura-Max® through-hardened-steel cutting edges. Weights include lubricants, coolants, full fuel tank, and 79-kg (175 lb.) operator. For complete details, contact your John Deere dealer.

JOHN DEERE